Miniature "Mini" Valves

SOFT & METAL SEAT

SOFT "WASHER" SEATS: .136" Orifice

Features
- PGI "Washer" Seat

Benefits
- Throttling and shut-off design
- Interchangeable between soft or metal seats
- Easily replaced
- Available in a variety of materials

INTEGRAL METAL TO METAL SEAT: .136" Orifice

Features
- PGI Integral Metal Seat

Benefits
- Throttling and shut-off design
- Interchangeable between soft or metal seats

Dimensions, inches [mm]

V-556

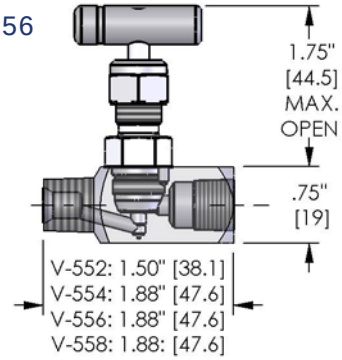

Note Regarding Handle Types:	
Soft Seated Valves	CS or SS Round Handles as Standard
Hard Seat Valves	CS or SS Bar Handles as Standard

Pressure vs. Temperature

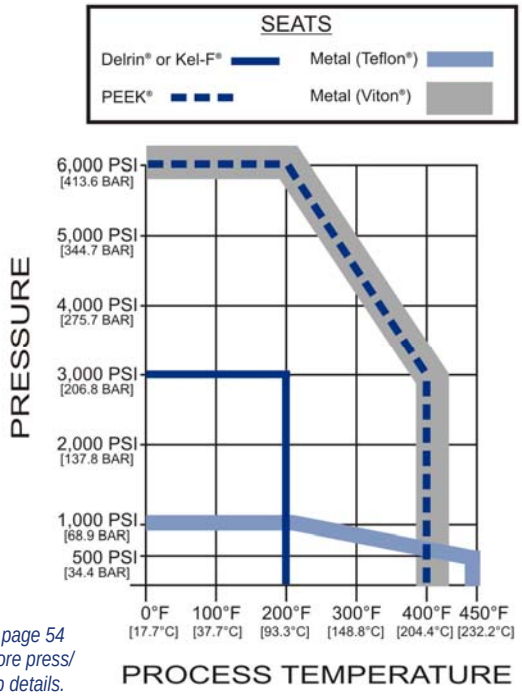

See page 54 for more press/ temp details.

Part Number Selection

Base Model

		Inlet x Outlet
V-	552	1/4" MNPT x 1/4" FNPT Angle
V-	554	1/4" MNPT x 1/4" MNPT
V-	556	1/4" MNPT x 1/4" FNPT
V-	558	1/4" FNPT x 1/4" FNPT

Body Material Code

C	ASTM A108
S	ASTM A479-316 SS

Seat Material Code

M	Metal *(Standard)*
D	Delrin® *(Standard)*
K	Kel-F®
P	Peek®

Stem Packing/Seal Code

T	Mini Teflon® Packed
V	Viton® O-Ring

V- [ ] [ ] [ ] [ ] [ ] - Options *[pages 49-50]*

Materials of Construction

Part	Carbon Steel	316 Stainless Steel
Body / Bonnet	ASTM A108	ASTM A479-316
Packing "T" / "V"	Teflon® / Viton® O-Ring	Teflon® / Viton® O-Ring
Stem	ASTM A479-316	ASTM A479-316
Packing Nut *(TFE Packed Only)*	ASTM A108	ASTM A582-303
Handles: Soft Seated Valves	CS or SS Round Handles are Standard	
Handles: Hard Seat Valves	CS or SS Bar Handles are Standard	

Max Cv Ratings

.136" Orifice	Body Style	
	Straight	Angle
Soft Seat	.22	.27
Metal Seat	.25	.32

Approx. Valve Weight:
.25 lbs. [.11 kg] ea.

Notes

- PGI Carbon Steel products are Alkaline Zinc plated for corrosion prevention
- PGI 316 SS products meet the requirements of NACE MR0175/ ISO 15156-3
- Carbon Steel Weld End Connection Bodies are ASTM A696 Gr.C